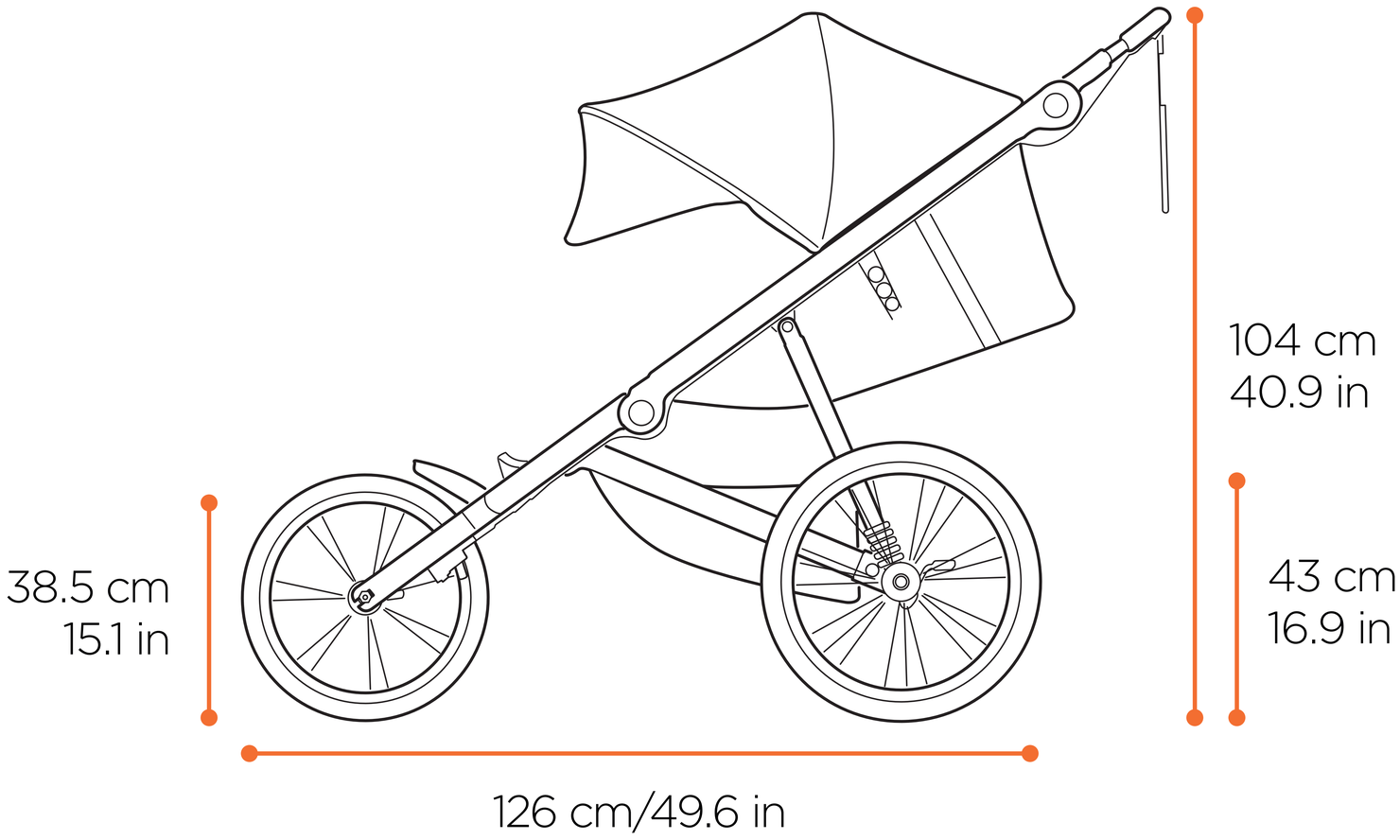
104 cm
40.9 in
43 cm
16.9 in
38.5 cm
15.1 in
126 cm/49.6 in

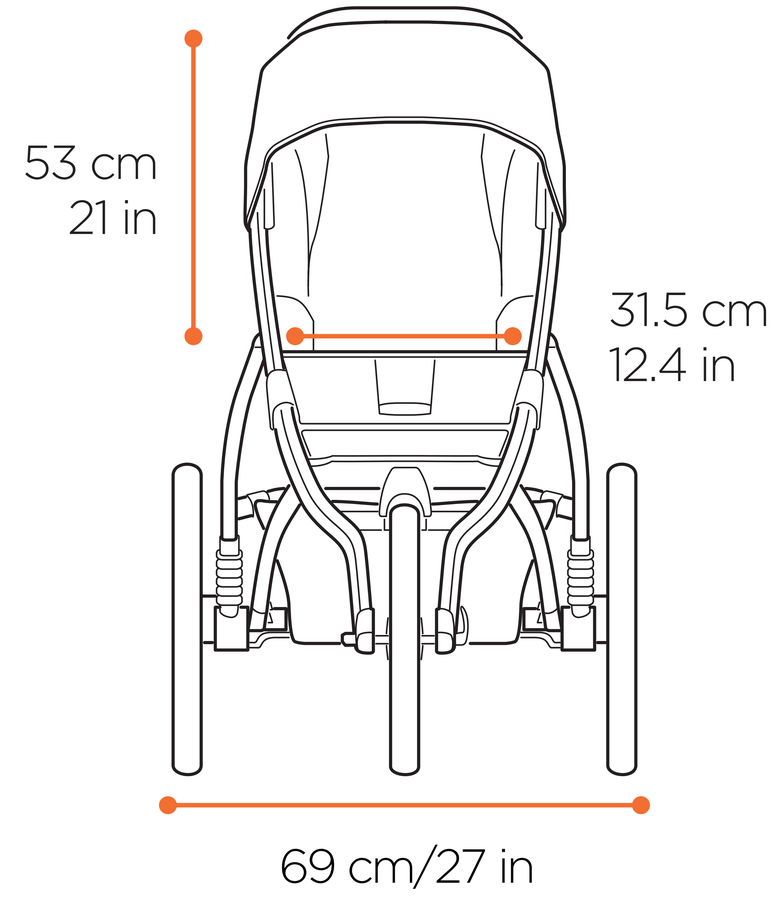
53 cm
21 in
31.5 cm
12.4 in
69 cm/27 in

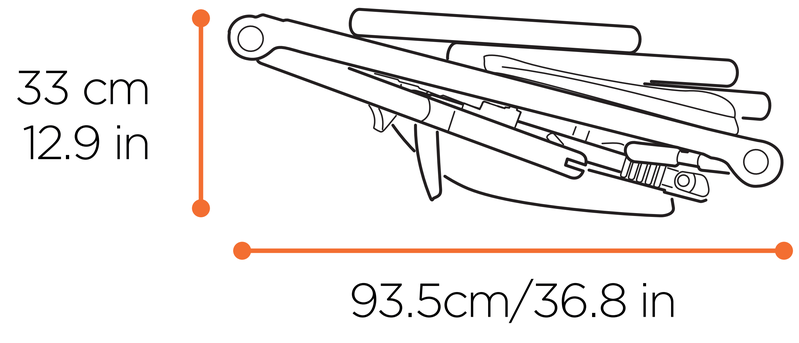
33 cm
12.9 in
93.5cm/36.8 in